PRODUCT SUMMARY

SKY77733 SkyHi™ Power Amplifier Module for LTE Bands 13 and 14 (777–798 MHz)

Applications

- Long-Term Evolution (LTE)
- Handsets and Data Cards

Features

- QPSK, 16QAM modulations
- Bands 13 and 14 linear power at 3.4 V
  - LTE 28 dBm
- Low voltage positive bias supply 3.0 V to 4.5 V
- Excellent linearity and efficiency
- Large dynamic range
- Small, low profile package
  - 3 mm x 3 mm x 0.9 mm
  - 10-pad configuration
- InGaP BiFET Technology
- For RoHS and other product compliance information, see the Skyworks Certificate of Conformance

Description

The SKY77733 SkyHi™ Power Amplifier Module (PAM) is a fully matched, surface mount module developed for LTE applications. This small and efficient module packs full coverage of LTE Bands 13/14 into a single compact package. The SKY77733 meets the stringent spectral linearity requirements of LTE modulation with QPSK / 16QAM modulations from 5 MHz to 10 MHz bandwidth and full or partial resource block allocations with high power added efficiency.

The single Gallium Arsenide (GaAs) Microwave Monolithic Integrated Circuit (MMIC) contains all active circuitry in the module, including the PA, input, and interstage matching. Output match is realized off-chip within the module package to optimize efficiency and power performance into a 50 Ω load. The SKY77733 is manufactured with Skyworks' BiFET process which provides for all positive voltage DC supply operation while maintaining high efficiency and good linearity. Primary bias is supplied via the VCC1 and VCC2 pads directly from battery output in the 3.0 to 4.5 volt range. Power-down is accomplished by setting a logic low level on the VEN pad. No external supply side switch is needed as typical "off" leakage is a few microamperes with full primary voltage supplied from the battery. The VMODE0 and VMODE1 pads are used to switch between high, medium and low power modes to reduce current consumption and gain in the back-off conditions.

DISCONTINUED

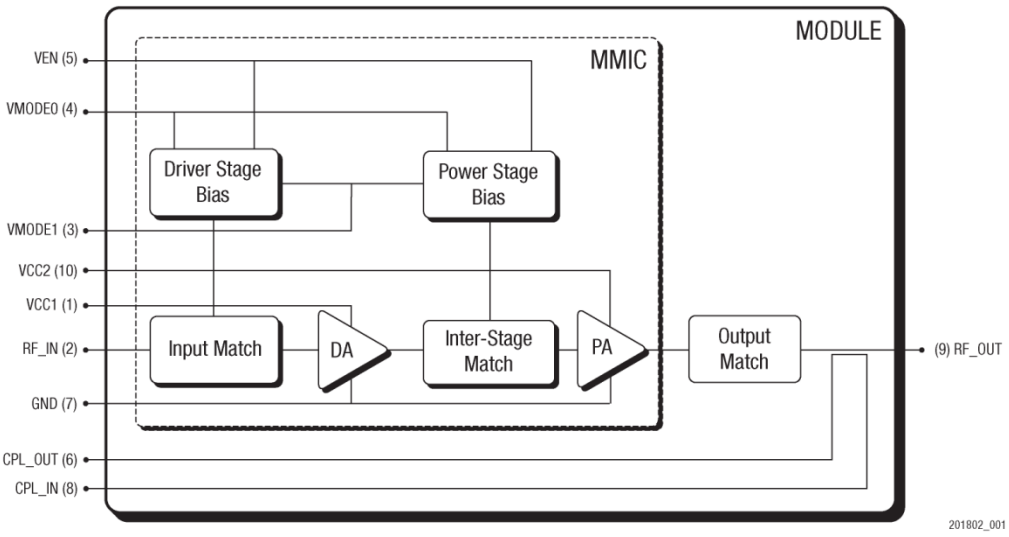

Figure 1. SKY77733 Functional Block Diagram

Ordering Information

Order Number	Manufacturing Part Number	Evaluation Board Part Number
SKY77733 SkyHi™ Power Amplifier Module	SKY77733	EN40-D345-002



Copyright © 2012-2013, 2026, Skyworks Solutions, Inc. All Rights Reserved.

Information in this document is provided in connection with Skyworks Solutions, Inc., and its subsidiaries (“Skyworks”) products or services. These materials, including the information contained herein, are provided by Skyworks as a service to its customers and may be used for informational purposes only by the customer. Skyworks assumes no responsibility for errors or omissions in these materials or the information contained herein. Skyworks may change its documentation, products, services, specifications or product descriptions at any time, without notice. Skyworks makes no commitment to update the materials or information and shall have no responsibility whatsoever for conflicts, incompatibilities, or other difficulties arising from any future changes.

No license, whether express, implied, by estoppel or otherwise, is granted to any intellectual property rights by this document. Skyworks assumes no liability for any materials, products or information provided hereunder, including the sale, distribution, reproduction or use of Skyworks products, information or materials, except as may be provided in Skyworks’ Terms and Conditions of Sale.

THE INFORMATION IN THIS DOCUMENT AND THE MATERIALS AND PRODUCTS DESCRIBED THEREIN ARE PROVIDED “AS IS” WITHOUT WARRANTY OF ANY KIND, WHETHER EXPRESS, IMPLIED, STATUTORY, OR OTHERWISE, INCLUDING FITNESS FOR A PARTICULAR PURPOSE OR USE, MERCHANTABILITY, PERFORMANCE, QUALITY OR NON-INFRINGEMENT OF ANY INTELLECTUAL PROPERTY RIGHT; ALL SUCH WARRANTIES ARE HEREBY EXPRESSLY DISCLAIMED. SKYWORKS DOES NOT WARRANT THE ACCURACY OR COMPLETENESS OF THE INFORMATION, TEXT, GRAPHICS OR OTHER ITEMS CONTAINED WITHIN THESE MATERIALS. SKYWORKS SHALL NOT BE LIABLE FOR ANY DAMAGES, INCLUDING BUT NOT LIMITED TO ANY SPECIAL, INDIRECT, INCIDENTAL, STATUTORY, OR CONSEQUENTIAL DAMAGES, INCLUDING WITHOUT LIMITATION, LOST REVENUES OR LOST PROFITS THAT MAY RESULT FROM THE USE OF THE MATERIALS OR INFORMATION, WHETHER OR NOT THE RECIPIENT OF MATERIALS HAS BEEN ADVISED OF THE POSSIBILITY OF SUCH DAMAGE.

Skyworks products are not designed, intended, authorized, or warranted for use or inclusion in life support or life endangering applications, devices, or systems where failure or inaccuracy might cause death or personal injury. Skyworks customers agree not to use or sell the Skyworks products for such applications, and further agree to, without limitation, fully defend, indemnify, and hold harmless Skyworks and its agents from and against any and all actions, suits, proceedings, costs, expenses, damages, and liabilities including attorneys' fees arising out of or in connection with such improper use or sale.

Skyworks assumes no liability for applications assistance, customer product design, or damage to any equipment resulting from the use of Skyworks products outside of Skyworks’ published specifications or parameters. Customers are solely responsible for their products and applications using the Skyworks products.

“Skyworks” and the Skyworks Starburst logo are registered trademarks of Skyworks Solutions, Inc., in the United States and other countries. Third-party brands and names are for identification purposes only and are the property of their respective owners. Additional information, including relevant terms and conditions, posted at www.skyworksinc.com, are incorporated by reference.