PRODUCT SUMMARY

SKY77765 SkyHi™ Power Amplifier Module for CDMA / WCDMA / HSDPA / HSUPA / HSPA+ / LTE – Band V (815–849 MHz)

Applications

- WCDMA handsets
- HSDPA
- HSUPA
- HSPA+
- LTE
- CDMA2000
- EVDO

Features

- Low voltage positive bias supply 3.2 V to 4.2 V
- Good linearity
- High efficiency
  - 50% at 28.25 dBm
- Large dynamic range
- Small, low profile package
  - 3 mm x 3 mm x 0.9 mm
  - 10-pad configuration
- Power down control
- InGaP
- Supports low collector voltage operation
- Digital Enable
- No V_{REF} required
- CMOS compatible control signals
- Integrated Directional Coupler
- For RoHS and other product compliance information, see the Skyworks Certificate of Conformance

Description

The SKY77765 SkyHi™ Power Amplifier Module (PAM) is a fully matched 10-pad surface mount module developed for Wideband Code Division Multiple Access (WCDMA) applications. This small and efficient module packs full 815-849 MHz bandwidth coverage into a single compact package. Because of high efficiencies attained throughout the entire power range, the SKY77765 delivers unsurpassed talk-time advantages. The SKY77765 meets the stringent spectral linearity requirements of High Speed Downlink Packet Access (HSDPA), High Speed Uplink Packet Access (HSUPA), and Long Term Evolution (LTE) data transmission with high power added efficiency. An integrated directional coupler eliminates the need for any external coupler.

The Gallium Arsenide (GaAs) Microwave Monolithic Integrated Circuit (MMIC) contains all amplifier active circuitry, including input and interstage matching circuits. The silicon CMOS support die, providing precision biasing for the MMIC affords a true CMOS-compatible control interface. Output match into a 50-ohm load, realized off-chip within the module package, optimizes efficiency and power performance.

The SKY77765 is manufactured with Skyworks' InGaP GaAs Heterojunction Bipolar Transistor (HBT) process which provides for all positive voltage DC supply operation and maintains high efficiency and good linearity. While primary bias to the SKY77765 can be supplied directly from any suitable battery with an output of 3.2 V to 4.2 V, optimal performance is obtained with VCC2 sourced from a DC-DC power supply adjusted within 0.5 V to 3.4 V based on target output power levels. Power down executes by setting VENABLE to zero volts. No external supply side switch is needed as typical "off" leakage is a few microamperes with full primary voltage supplied from the battery.

DISCONTINUED

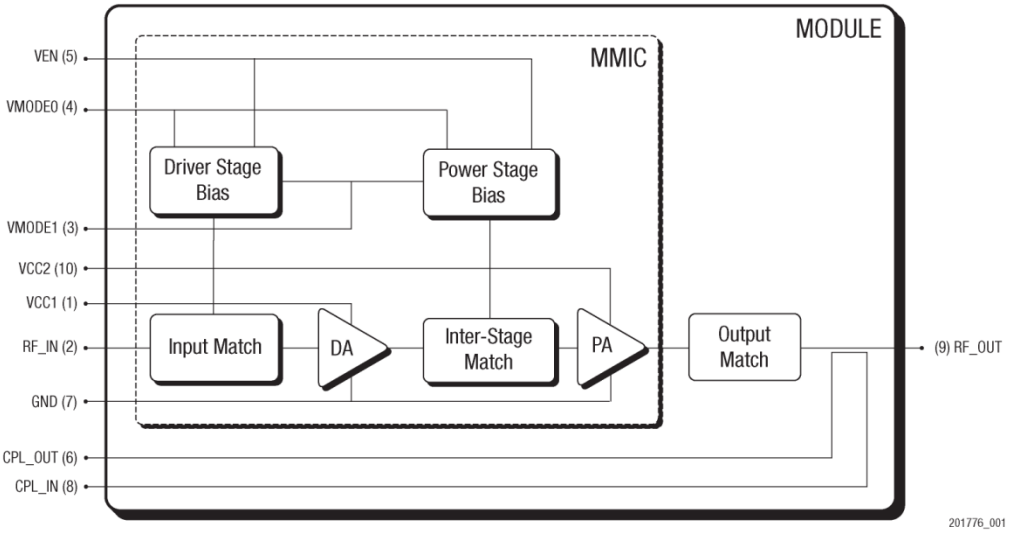

Figure 1. SKY77765 Functional Block Diagram

Ordering Information

Product Name	Order Number	Evaluation Board Part Number
SKY77765 SkyHi™ Power Amplifier Module	SKY77765	EN40-D345-003



Copyright © 2012-2013, 2026, Skyworks Solutions, Inc. All Rights Reserved.

Information in this document is provided in connection with Skyworks Solutions, Inc., and its subsidiaries (“Skyworks”) products or services. These materials, including the information contained herein, are provided by Skyworks as a service to its customers and may be used for informational purposes only by the customer. Skyworks assumes no responsibility for errors or omissions in these materials or the information contained herein. Skyworks may change its documentation, products, services, specifications or product descriptions at any time, without notice. Skyworks makes no commitment to update the materials or information and shall have no responsibility whatsoever for conflicts, incompatibilities, or other difficulties arising from any future changes.

No license, whether express, implied, by estoppel or otherwise, is granted to any intellectual property rights by this document. Skyworks assumes no liability for any materials, products or information provided hereunder, including the sale, distribution, reproduction or use of Skyworks products, information or materials, except as may be provided in Skyworks' Terms and Conditions of Sale.

THE INFORMATION IN THIS DOCUMENT AND THE MATERIALS AND PRODUCTS DESCRIBED THEREIN ARE PROVIDED “AS IS” WITHOUT WARRANTY OF ANY KIND, WHETHER EXPRESS, IMPLIED, STATUTORY, OR OTHERWISE, INCLUDING FITNESS FOR A PARTICULAR PURPOSE OR USE, MERCHANTABILITY, PERFORMANCE, QUALITY OR NON-INFRINGEMENT OF ANY INTELLECTUAL PROPERTY RIGHT; ALL SUCH WARRANTIES ARE HEREBY EXPRESSLY DISCLAIMED. SKYWORKS DOES NOT WARRANT THE ACCURACY OR COMPLETENESS OF THE INFORMATION, TEXT, GRAPHICS OR OTHER ITEMS CONTAINED WITHIN THESE MATERIALS. SKYWORKS SHALL NOT BE LIABLE FOR ANY DAMAGES, INCLUDING BUT NOT LIMITED TO ANY SPECIAL, INDIRECT, INCIDENTAL, STATUTORY, OR CONSEQUENTIAL DAMAGES, INCLUDING WITHOUT LIMITATION, LOST REVENUES OR LOST PROFITS THAT MAY RESULT FROM THE USE OF THE MATERIALS OR INFORMATION, WHETHER OR NOT THE RECIPIENT OF MATERIALS HAS BEEN ADVISED OF THE POSSIBILITY OF SUCH DAMAGE.

Skyworks products are not designed, intended, authorized, or warranted for use or inclusion in life support or life endangering applications, devices, or systems where failure or inaccuracy might cause death or personal injury. Skyworks customers agree not to use or sell the Skyworks products for such applications, and further agree to, without limitation, fully defend, indemnify, and hold harmless Skyworks and its agents from and against any and all actions, suits, proceedings, costs, expenses, damages, and liabilities including attorneys' fees arising out of or in connection with such improper use or sale.

Skyworks assumes no liability for applications assistance, customer product design, or damage to any equipment resulting from the use of Skyworks products outside of Skyworks' published specifications or parameters. Customers are solely responsible for their products and applications using the Skyworks products.

“Skyworks” and the Skyworks Starburst logo are registered trademarks of Skyworks Solutions, Inc., in the United States and other countries. Third-party brands and names are for identification purposes only and are the property of their respective owners. Additional information, including relevant terms and conditions, posted at www.skyworksinc.com, are incorporated by reference.