PRODUCT SUMMARY

SKY77651-11 SkyLiTE™ Multimode Multiband Power Amplifier Module

DISCONTINUED

Applications

- Multiband 3G / LTE handsets
- LTE Carrier Aggregation
- WCDMA Bands: V and VIII
- CDMA Bands: BC0 and BC10
- FDD LTE Bands:
  5, 8, 12, 13, 14, 17, 20, 26, 27, 28

Features

- Paired with SKY77652
  (Mid-band / High Band)
- Seven outputs
- Industry-leading PAE for 3G/4G
- Optimized for APT DCDC operation
- Fully programmable Mobile Industry Processor Interface (MIPI) control
- MIPI programmable bias modes optimize efficiency / linearity trade-off for 3G and 4G; minimizes DG09 for 3G.
- For RoHS and other product compliance information, see the Skyworks Certificate of Conformance.
- Small, low profile package:
  - 4.0 mm x 2.8 mm x 0.75 mm
  - 24-pad configuration

Description

Skyworks SKY77651-11 SkyLiTE™ is a multimode multiband (MMMB) Power Amplifier Module (PAM) that supports 3G / 4G handsets and operates efficiently in CDMA, WCDMA, and LTE modes. The module is fully programmable through a Mobile Industry Processor Interface (MIPI®).

The PAM consists of a WCDMA / LTE block for low band, a Multi-Function Control (MFC) block, and RF input/output ports internally matched to 50 Ω to reduce the number of external components. A CMOS integrated circuit uses standard MIPI controls to provide the internal MFC interface and operation. Extremely low leakage current maximizes handset standby time.

The InGaP die and the silicon die and passive components are mounted on a multi-layer laminate substrate. The assembly is encapsulated in a 4.0 mm x 2.8 mm x 0.75 mm, 24-pad MCM, SMT package which allows for a highly manufacturable, low cost solution.

3G: The SKY77651-11 supports CDMA, WCDMA, High-Speed Downlink Packet Access (HSDPA), High Speed Uplink Packet Access (HSUPA), and High Speed Packet Access (HSPA+) modulations. Varying the input power level provides output power control. V_{CC} is adjusted using a DCDC converter to maximize efficiency for each power level and modulation type.

4G: The SKY77651-11 supports 1.4, 3, 5, 10, 15, 20 MHz channel bandwidths. Similar to 3G operation, output power is controlled by varying the input power and V_{CC} is adjusted using a DCDC converter to maximize efficiency for each power level.

3G / 4G Modulation scheme includes:

- WCDMA Voice Release 99
- HSDPA categories
- HSUPA
- HSPA+
- CDMA2000 1x RC1, 1x RC3
- CDMA2000 EVDO
- LTE 1.4, 3, 5, 10, 15, 20 MHz Channel BW

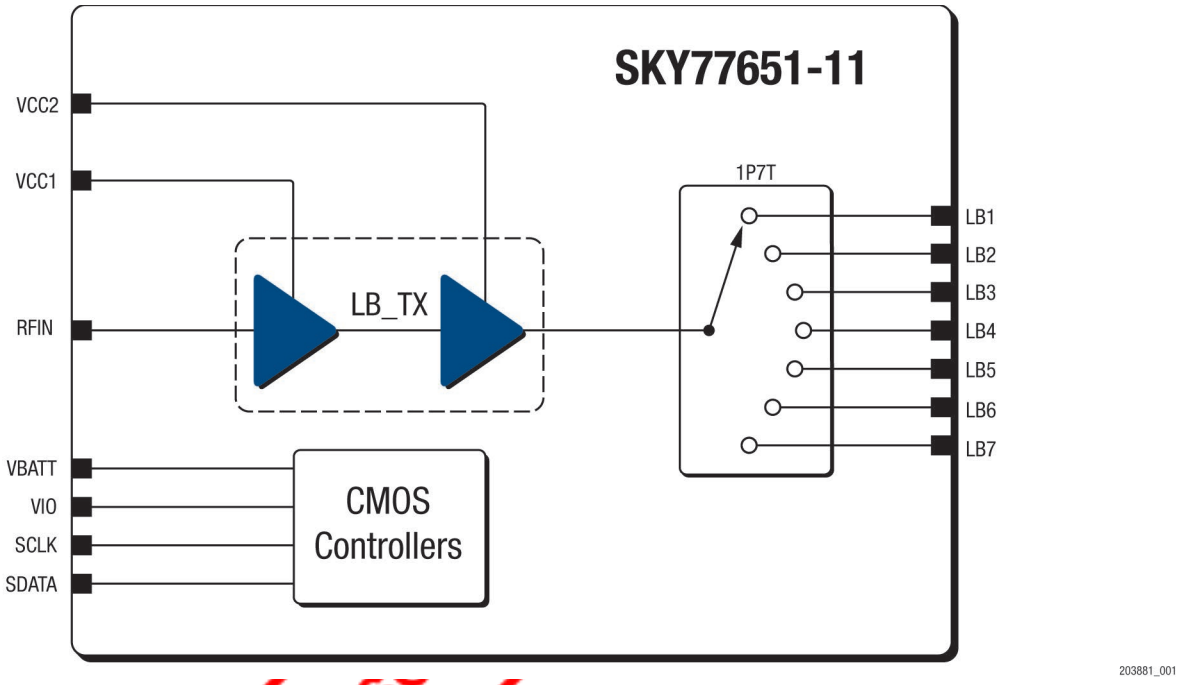

Figure 1. SKY77651-11 Functional Block Diagram

Ordering Information

Product Name	Order Number	Evaluation Board Part Number
SKY77651-11 SkyLiTE™ Multimode Multiband Power Amplifier Module	SKY77651-11	EN41-D116-001

Copyright © 2016, 2025, Skyworks Solutions Inc. All Rights Reserved.

Information in this document is provided in connection with Skyworks Solutions, Inc., and its subsidiaries (“Skyworks”) products or services. These materials, including the information contained herein, are provided by Skyworks as a service to its customers and may be used for informational purposes only by the customer. Skyworks assumes no responsibility for errors or omissions in these materials or the information contained herein. Skyworks may change its documentation, products, services, specifications or product descriptions at any time, without notice. Skyworks makes no commitment to update the materials or information and shall have no responsibility whatsoever for conflicts, incompatibilities, or other difficulties arising from any future changes.

No license, whether express, implied, by estoppel or otherwise, is granted to any intellectual property rights by this document. Skyworks assumes no liability for any materials, products or information provided hereunder, including the sale, distribution, reproduction or use of Skyworks products, information or materials, except as may be provided in Skyworks’ Terms and Conditions of Sale.

THE INFORMATION IN THIS DOCUMENT AND THE MATERIALS AND PRODUCTS DESCRIBED THEREIN ARE PROVIDED “AS IS” WITHOUT WARRANTY OF ANY KIND, WHETHER EXPRESS, IMPLIED, STATUTORY, OR OTHERWISE, INCLUDING FITNESS FOR A PARTICULAR PURPOSE OR USE, MERCHANTABILITY, PERFORMANCE, QUALITY OR NON-INFRINGEMENT OF ANY INTELLECTUAL PROPERTY RIGHT; ALL SUCH WARRANTIES ARE HEREBY EXPRESSLY DISCLAIMED. SKYWORKS DOES NOT WARRANT THE ACCURACY OR COMPLETENESS OF THE INFORMATION, TEXT, GRAPHICS OR OTHER ITEMS CONTAINED WITHIN THESE MATERIALS. SKYWORKS SHALL NOT BE LIABLE FOR ANY DAMAGES, INCLUDING BUT NOT LIMITED TO ANY SPECIAL, INDIRECT, INCIDENTAL, STATUTORY, OR CONSEQUENTIAL DAMAGES, INCLUDING WITHOUT LIMITATION, LOST REVENUES OR LOST PROFITS THAT MAY RESULT FROM THE USE OF THE MATERIALS OR INFORMATION, WHETHER OR NOT THE RECIPIENT OF MATERIALS HAS BEEN ADVISED OF THE POSSIBILITY OF SUCH DAMAGE.

Skyworks products are not designed, intended, authorized, or warranted for use or inclusion in life support or life endangering applications, devices, or systems where failure or inaccuracy might cause death or personal injury. Skyworks customers agree not to use or sell the Skyworks products for such applications, and further agree to, without limitation, fully defend, indemnify, and hold harmless Skyworks and its agents from and against any and all actions, suits, proceedings, costs, expenses, damages, and liabilities including attorneys' fees arising out of or in connection with such improper use or sale.

Skyworks assumes no liability for applications assistance, customer product design, or damage to any equipment resulting from the use of Skyworks products outside of Skyworks’ published specifications or parameters. Customers are solely responsible for their products and applications using the Skyworks products.

“Skyworks” and the Skyworks Starburst logo are registered trademarks of Skyworks Solutions, Inc., in the United States and other countries. Third-party brands and names are for identification purposes only and are the property of their respective owners. Additional information, including relevant terms and conditions, posted at www.skyworksinc.com, are incorporated by reference.