PRODUCT SUMMARY

SKY85310-11: 2.4 GHz, 256 QAM Front-End Module for WLAN/ and Port Suitable for Bluetooth® Applications

Applications

- Wi-Fi-enabled smartphones, tablets, and mobile/portable devices
- System-in-Package (SIP) modules for embedded systems

Features

- Integrated high-performance 2.4 GHz PA, harmonic filter, LNA with bypass, and T/R switch
- Fully matched input and output
- LNA with integrated bypass mode
- High-performance SP3T switch to support a port suitable for Bluetooth® applications/Wi-Fi functions
- Integrated positive slope power detector
- Transmit gain: 29 dB @ 3.3 V
- Receive gain: 12 dB
- Output power: +18 dBm @ 1.8% EVM, MCS8
- Output power: +19 dBm @ 3% EVM, MCS7
- Small, QFN (16-pin, 3 x 3 mm) package (MSL1, 260 °C per JEDEC J-STD-020)

Skyworks Green™ products are compliant with all applicable legislation and are halogen-free. For additional information, refer to *Skyworks Definition of Green™*, document number SQ04–0074.

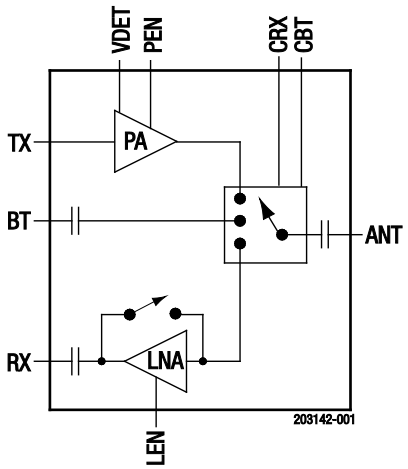

Figure 1. SKY85310-11 Block Diagram

Description

The SKY85310-11 is a complete 802.11b/g/n 256 QAM WLAN RF front-end module (FEM) with support for a port suitable for Bluetooth® applications. The device provides all the functionality of a fully matched power amplifier (PA), power detector, harmonic filter, low-noise amplifier (LNA), and single-pole, triple-throw (SP3T) switch.

The SKY85310-11 provides a complete 2.4 GHz WLAN RF solution from the output of the transceiver to the antenna, and from the antenna to the input of the transceiver. The LNA increases the receive sensitivity of embedded solutions to improve range or to overcome the insertion loss of cellular filters (often included for mobile applications).

The SKY85310-11 also includes a transmitter power detector with 20 dB of dynamic range, and a digital enable control for transmitter power ramp on/off control.

The device is provided in an ultra-compact, 16-pin 3 x 3 mm Quad Flat No-Lead (QFN) package. A functional block diagram is shown in Figure 1.

Ordering Information

Model Name	Manufacturing Part Number	Evaluation Board Part Number
SKY85310-11: 2.4 GHz Front-End Module	SKY85310-11	SKY85310-11EK1

Copyright © 2017, 2022 Skyworks Solutions, Inc. All Rights Reserved.

Information in this document is provided in connection with Skyworks Solutions, Inc. (“Skyworks”) products or services. These materials, including the information contained herein, are provided by Skyworks as a service to its customers and may be used for informational purposes only by the customer. Skyworks assumes no responsibility for errors or omissions in these materials or the information contained herein. Skyworks may change its documentation, products, services, specifications or product descriptions at any time, without notice. Skyworks makes no commitment to update the materials or information and shall have no responsibility whatsoever for conflicts, incompatibilities, or other difficulties arising from any future changes.

No license, whether express, implied, by estoppel or otherwise, is granted to any intellectual property rights by this document. Skyworks assumes no liability for any materials, products or information provided hereunder, including the sale, distribution, reproduction or use of Skyworks products, information or materials, except as may be provided in Skyworks’ Terms and Conditions of Sale.

THE MATERIALS, PRODUCTS AND INFORMATION ARE PROVIDED “AS IS” WITHOUT WARRANTY OF ANY KIND, WHETHER EXPRESS, IMPLIED, STATUTORY, OR OTHERWISE, INCLUDING FITNESS FOR A PARTICULAR PURPOSE OR USE, MERCHANTABILITY, PERFORMANCE, QUALITY OR NON-INFRINGEMENT OF ANY INTELLECTUAL PROPERTY RIGHT; ALL SUCH WARRANTIES ARE HEREBY EXPRESSLY DISCLAIMED. SKYWORKS DOES NOT WARRANT THE ACCURACY OR COMPLETENESS OF THE INFORMATION, TEXT, GRAPHICS OR OTHER ITEMS CONTAINED WITHIN THESE MATERIALS. SKYWORKS SHALL NOT BE LIABLE FOR ANY DAMAGES, INCLUDING BUT NOT LIMITED TO ANY SPECIAL, INDIRECT, INCIDENTAL, STATUTORY, OR CONSEQUENTIAL DAMAGES, INCLUDING WITHOUT LIMITATION, LOST REVENUES OR LOST PROFITS THAT MAY RESULT FROM THE USE OF THE MATERIALS OR INFORMATION, WHETHER OR NOT THE RECIPIENT OF MATERIALS HAS BEEN ADVISED OF THE POSSIBILITY OF SUCH DAMAGE.

Skyworks products are not intended for use in medical, lifesaving or life-sustaining applications, or other equipment in which the failure of the Skyworks products could lead to personal injury, death, physical or environmental damage. Skyworks customers using or selling Skyworks products for use in such applications do so at their own risk and agree to fully indemnify Skyworks for any damages resulting from such improper use or sale.

Customers are responsible for their products and applications using Skyworks products, which may deviate from published specifications as a result of design defects, errors, or operation of products outside of published parameters or design specifications. Customers should include design and operating safeguards to minimize these and other risks. Skyworks assumes no liability for applications assistance, customer product design, or damage to any equipment resulting from the use of Skyworks products outside of Skyworks’ published specifications or parameters.

Skyworks, the Skyworks symbol, Sky5®, SkyOne®, SkyBlue™, Skyworks Green™, ClockBuilder®, DSPLL®, ISOmodem®, ProSLIC®, and SiPHY® are trademarks or registered trademarks of Skyworks Solutions, Inc. or its subsidiaries in the United States and other countries. Third-party brands and names are for identification purposes only and are the property of their respective owners. Additional information, including relevant terms and conditions, posted at www.skyworksinc.com, are incorporated by reference.