SKYWORKS
BREAKTHROUGH SIMPLICITY

Ultra Low Noise Amplifiers (LNAs)

Select LNAs Available from Stock for Prototype or High-Volume Production

Applications

- WiMAX, WCDMA, and LTE base station receivers
- WLAN enterprise access point receivers
- GPS receivers
- Public safety radios
- Test and measurement instrumentation
- ISM band receivers
- Military communications
- Smart energy

Features

- Excellent noise figure, as low as 0.50 dB
- High third order intercept
- Excellent stability
- Small form factor packages
- Broadband designs
- Low supply current
- High efficiency
- Flat gain response
- Single and two stage designs

Skyworks Solutions offers a select group of ultra low noise, high linearity low noise amplifiers which are in stock and ready for immediate design into your demanding applications.

Pseudomorphic High Electron Mobility Transistor (pHEMT) Linear LNAs

The ultra low noise SKY67100, SKY67101, and SKY67102 are part of a LNA family which cover a frequency range from 400–2800 MHz, using a common package and application layout. The cascode architecture of these devices yields excellent linearity, bandwidth, and super low noise figure with high efficiency. Typical bias conditions are V_{DD} = 4 V and I_{DS} = 55 mA to produce 17 dB gain across the 400–2800 MHz band. A key attribute of these devices is their high active reverse isolation which results in easy input and output impedance matching, and unconditional stability up to 18 GHz and beyond. Additionally, these devices feature fully integrated active bias circuitry requiring only a single positive supply voltage, resulting in a minimal number of external components.

For less demanding applications, the low cost and lower gain SKY67014-396LF features noise figure <1.0 dB, 12 dB gain, 15 dBm $OP_{1\ dB}$, yet draws only 5 mA of current with 3.3 V supply. An OIP3 of 26 dBm @ 2.5 GHz is achievable with 15 mA supply current. Integrated active bias circuitry reduces external matching requirements and enables a wide supply voltage range of 1.8 to 5 V and operation over a broad 1500–3000 MHz frequency range. For lower frequency operation with similar performance attributes, Skyworks now offers the SKY67012-396LF (300–600 MHZ) and the SKY67013-396LF (600–1500 MHz). All these parts are ideal for use in high sensitivity battery-operated receivers.

The higher linearity SKY6700X family consists of three devices which cover a frequency range of 700–3000 MHz. These cascode pHEMT devices are essentially higher power versions of the SKY67101, SKY67100, and SKY67102 devices with the addition of a low current power down pin. Using larger FET devices, these parts are ideal for operating in high temperature environments up to +100 °C and provide OIP3 > 39 dBm.

The high gain SKY67105, SKY67106, and SKY67107 devices utilize the best properties of low noise pHEMT input stages and inGap HBT or pHEMT output stages to obtain excellent noise figure and efficient linearity. These two stage designs achieve outstanding isolation and stability with high gain of roughly 35 dB. With their extremely high reverse isolation, these devices are unconditionally stable to 24 GHz and beyond.

Applications include high performance cellular infrastructure base station receivers for GSM, WCDMA, and LTE modulation schemes, as well as any other high performance LNA application in the 300–3000 MHz frequency range. These devices come packaged in a 2 x 2 mm, 8-pin, plastic DFN package or a 4 x 4 mm, 16-pin QFN package which offers excellent thermal performance.

Our amplifier solutions leverage the extensive design knowledge, technical leadership, manufacturing expertise, and superior quality of Skyworks. A select list of Skyworks' LNAs are provided in Table 1. Evaluation boards are also available.

Our application engineering team is ready to assist you with your design efforts. Application notes and block diagrams are available on Skyworks' Web site, www.skyworksinc.com.

WiFi LNAs

Skyworks offers a broad portfolio of LNAs supporting multiple WiFi markets, ranging from access points, gateways, and routers to smart phones and tablets. With industry-leading low noise figures in the 5 GHz band, the SKY65404-31 is a small form-factor, highly-integrated LNA ideal for applications requiring excellent receiver sensitivity. The corresponding device for the 2.4 GHz frequency band is the SKY65405-21, with a matched noise figure of 1.1 dB. Both are packaged in a 1.5 x 1.5 x 0.45 mm QFN package, and require a minimal number of external components, enabling ease-of-use and a fast time-to-market.

Table 1. Select LNAs for Cellular Infrastructure, GPS, Broadband, ISM Band, and WLAN Applications

Part Number New Products	Application	Frequency Range (GHz)	Test Frequency (MHz)	Gain (dB)	NF (dB)	OIP3 (dBm)	$OP_{1\,dB}$ (dBm)	V_{DD} (V) (Operating Range)	I_{DD} (mA) (Operating Range)	Package (mm)
SKY67101-396LF	Cellular Infrastructure	0.4–1.2	900	17.5	0.50	34.0	19.0	4 (3.3–5.0)	56 (20–90)	DFN 8L 2 x 2 x 0.75
SKY67100-396LF	Cellular Infrastructure	1.2–2.3	1950	17.5	0.70	34.0	18.5	4 (3.3–5.0)	56 (20–90)	DFN 8L 2 x 2 x 0.75
SKY67102-396LF	Cellular Infrastructure	2.0–3.0	2600	17.2	0.80	33.8	15.0	4 (3.3–5.0)	50 (20–90)	DFN 8L 2 x 2 x 0.75
SKY67001-396LF	Cellular Infrastructure	0.6–1.2	900	17.5	0.60	40.5	21.0	5 (3.3–5.0)	100 (50–120)	DFN 8L 2 x 2 x 0.75
SKY67002-396LF	Cellular Infrastructure	1.6–2.1	1850	17.5	0.65	39.5	20.0	5 (3.3–5.0)	95 (50–120)	DFN 8L 2 x 2 x 0.75
SKY67003-396LF	Cellular Infrastructure	2.0–3.0	2600	17.5	0.88	39.0	19.7	5 (3.3–5.0)	100 (50–120)	DFN 8L 2 x 2 x 0.75
SKY67105-306LF	Cellular Infrastructure	0.6–1.1	850	37.0	0.70	41.0	26.0	5 (3.5–5.0)	138 (120–155)	QFN 16L 4 x 4 x 0.90
SKY67106-306LF	Cellular Infrastructure	1.5–3.0	1950	35.0	0.65	37.0	24.0	5 (3.5–5.0)	100 (80–125)	QFN 16L 4 x 4 x 0.90
SKY67107-306LF	Cellular Infrastructure	2.3–2.8	2600	32.0	0.85	37.5	18.5	5 (3.5–5.0)	125 (50–145)	QFN 16L 4 x 4 0.75
SKY67012-396LF	General Purpose	0.3–0.6	450	16.5	0.85	24.0	14.0	3.3 (1.8–5.0)	15 (5–30)	DFN 8L 2 x 2 x 0.75
SKY67013-396LF	General Purpose	0.6–1.5	900	14.0	0.85	26.0	15.5	3.3 (1.8–5.0)	15 (5–30)	DFN 8L 2 x 2 x 0.75
SKY67014-396LF	General Purpose	1.5–3.0	2450	12.0	0.95	18.0	6.0	3.3 (1.8–5.0)	5 (5–30)	DFN 8L 2 x 2 x 0.75
SKY65404-31	5.8 GHz WLAN and ISM Band	4.9–5.9	5800	13.0	1.20	20.0	9.0	3.3 (2.8–5.0)	11 (10–15)	DFN 6L 1.5 x 1.5 x 0.45
SKY65405-21	2.4 GHz WLAN and ISM Band	2.4–2.5	2450	15.0	1.10	24.0	15.0	3.3 (2.8–5.0)	12 (10–16)	DFN 6L 1.5 x 1.5 x 0.45

Skyworks Green™ products are compliant to all applicable materials legislation and are halogen-free. For additional information, refer to Skyworks Definition of Green™, document number SQ04-0074.

Superheterodyne Radio Receiver

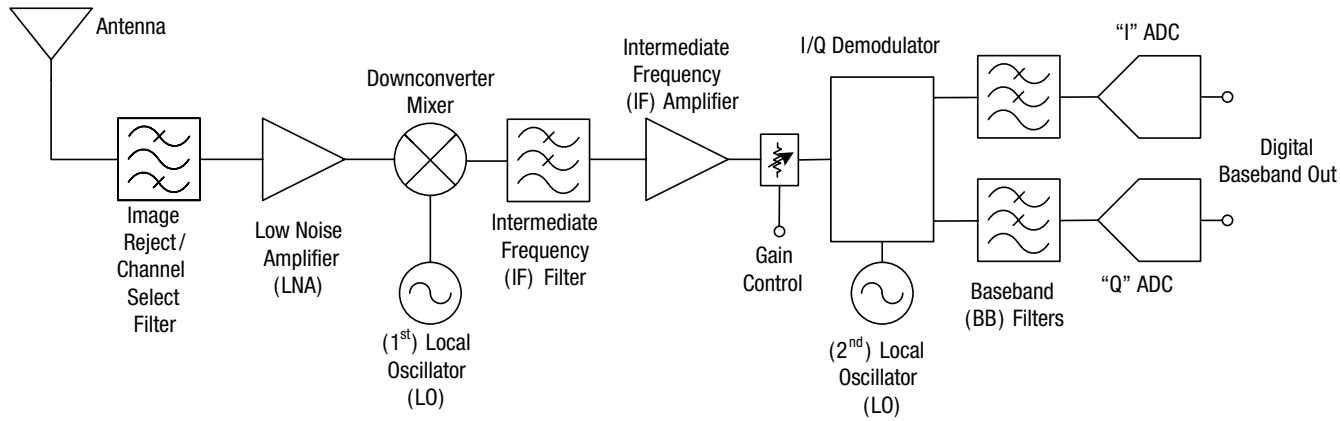

Figure 1. Typical Superheterodyne Radio Receiver Block Diagram

Applications

Radio receivers, such as the superheterodyne receiver shown in Figure 1, typically must process weak signals in the presence of extraneous received signals as well as internally-generated noise and distortion products. A well-designed receiver must have optimal sensitivity to the desired signal while producing minimal internally generated noise and distortion.

The amount of noise produced in a receiver is expressed as its noise factor (F) or noise figure (NF). The noise factor of a cascade of components is given by

$$F_{casc} = F_1 + \frac{F_2 - 1}{G_1} + \frac{F_3 - 1}{G_1 G_2} + \ldots + \frac{F_n - 1}{\prod_{N=1}^{n-1} G_N}$$

where

G_n = gain of stage n, expressed as a ratio (i.e., not expressed in dB)

F_n = noise factor of stage n, expressed as a ratio (i.e., not expressed in dB). F is the ratio of the input signal-to-noise ratio to the output signal-to-noise ratio for each stage

Noise figure is F expressed in dB

$$NF = 10 \log (F)$$

The equation for cascaded noise factor shows that the noise performance of the stages nearest to the input of the cascade set the lower bound for the noise figure of the entire cascade, which must be minimized to optimize receiver sensitivity. Also, the gain of the first stage is very important since it strongly affects the noise contribution of the following stages.

In order for the receiver to have optimal sensitivity, the production of distortion products within the cascade must be minimized while simultaneously minimizing noise figure. In most systems, distortion performance is described by the third order intercept (IP3) of the cascade, which is given by

$$IP3_{casc} = \frac{1}{\frac{1}{IP3_n} + \frac{1}{IP3_{n-1} \times G_n} + \frac{1}{IP3_{n-2} \times G_n \times G_{n-1}} + \ldots + \frac{1}{IP3_1 \times \prod_{N=1}^{n} G_N}}$$

where

G_n = gain of stage n, expressed as a ratio (i.e., <u>not</u> expressed in dB)

$IP3_n$ = third order intercept of stage n, expressed as power in watts, <u>not</u> in dBm. IP3 is the theoretical power level at which the power of desired signal is equal to that of the third-order distortion products.

Additionally, IP3 may be referred to power level at the input of a stage, in which case it is called input third order intercept (IIP3), or it may be referred to power level at the output of a stage, in which case it is called output third order intercept (OIP3). When performing analysis of a cascade, it is necessary to use either IIP3 or OIP3 for each stage in the cascade.

Typically, IP3 is expressed in dBm (dB relative to 1 mW) for radio receivers as

$$\text{IP3 (dBm)} = 10 \log \left(\frac{IP3}{10^{-3}} \right)$$

Optimal Circuit Design

Skyworks offers several application notes from our Web site (www.skyworksinc.com) which show suggested circuit designs for each LNA product at many frequency bands. Important factors include, but are not limited to, optimal impedance matching for noise figure and distortion performance, selection of operating current and the prevention of oscillation.

A low noise amplifier will produce minimum noise figure when it is driven from a specific impedance (Z_{opt}), which generally is not 50 Ω. Noise figure will degrade when driven by any other impedance. Since the characteristic impedance (Z_0) of most radio receivers is 50 Ω, the circuit designer must provide an input impedance matching network which transforms Z_0 to Z_{opt}. Since this impedance matching network is at the input of the LNA, its loss will have significant impact on cascaded NF, so the designer must trade off optimal impedance match for NF performance while also paying careful attention to the quality factor of each component in the matching network.

IP3 performance is significantly affected by operating current (I_{DS}), as well as by output impedance matching and the architecture of the LNA. Suggestions for optimal values of these parameters are also contained in the application notes described above.

Stability is an important factor in any amplifier design. Skyworks offers complete stability data to 18 GHz for all LNA products, along with suggestions for printed circuit board design that will prevent the possibility of oscillation.

SKY67100, SKY67101, SKY67102 Highlights:

With discrete low noise transistors, the source impedance that yields best noise figure (Z_{opt}) often differs greatly from that which offers best impedance match: the conjugate impedance of the active device which produces the complex conjugate input reflection coefficient, S_{11} conjugate. This can result in difficult matching tradeoffs to obtain an acceptable compromise for NF, gain, and input return loss.

The SKY6710X monolithic microwave integrated circuit (MMIC) LNAs are designed such that Z_{opt} and S_{11} conjugate are nearly equal. This allows the circuit designer to simultaneously achieve excellent NF, gain and input return loss.

The SKY67100 standard application circuit is optimized for performance from 1700 to 2000 MHz, as shown in the performance plots in Figures 2 and 3.

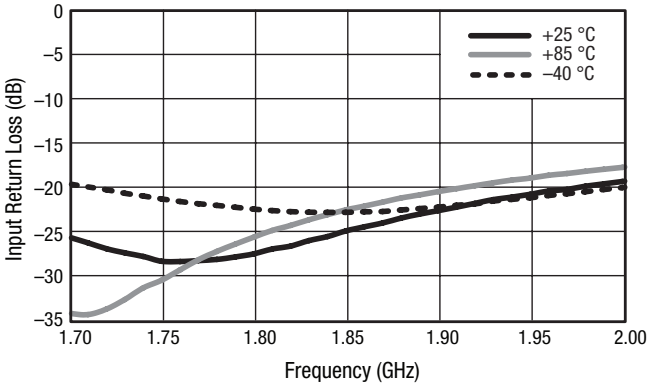

Figure 2. Narrowband Input Return Loss vs. Frequency
SKY67100

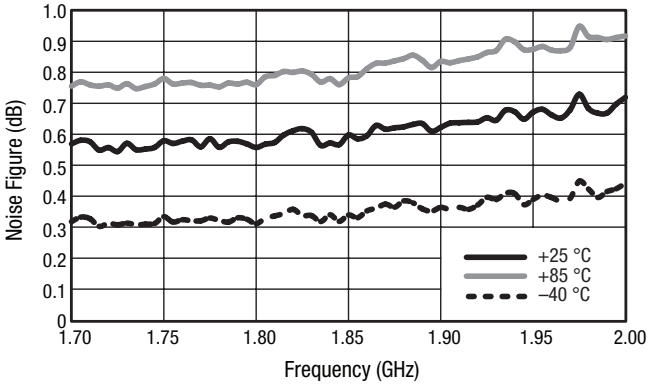

Figure 3. Noise Figure vs. Frequency
SKY67100

This design offers exceptional LNA performance without compromise. The SKY67100 application schematic shown in Figure 4 highlights the simple matching requirements for this family of LNAs, which all use the same application layout.

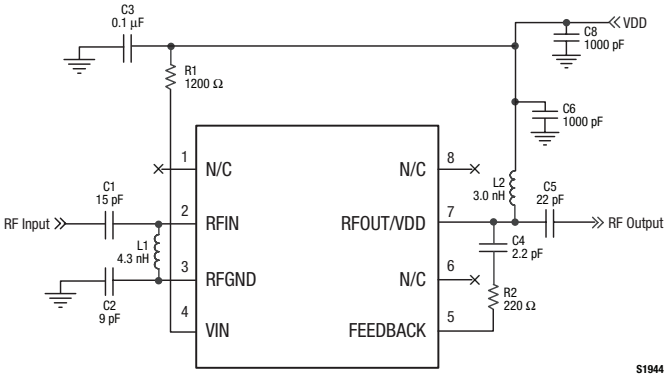

Figure 4. SKY67100-396LF Evaluation Board Schematic

SKY67001, SKY67002, SKY67003 Highlights:

This family consists of the SKY67001, SKY67002 and SKY67003 cascode e-pHEMT LNAs. These devices are higher power versions of the SKY6710X with higher compression and intercept points (OIP3 > 39 dBm). Using larger FET devices, these parts operate at very low maximum channel temperatures making them suitable for operation up to 100 degrees Celsius. The devices are unconditionally stable to 24 GHz and beyond.

SKY67012, SKY67013, SKY67014 Highlights:

The first device in this family of low-cost, high-performance pHEMT LNAs was the SKY67014-396LF. The device offers NF < 1.0 dB with easy matching, unconditional stability to >24 GHz, and flexible biasing options. Depending on application linearity requirements, this device can be operated with V_{DD} values from 1.8 to 5.0 volts and with I_{DDQ} values from 5 to 30 mA. The SKY67014 is specified over a broad 1500 to 3000 MHz frequency range.

The SKY67014 is now part of a three device family of efficient, cost-effective and high-performance LNAs for broad market applications. The SKY67012-396LF covering 300 to 600 MHz and the SKY67013-396LF covering 600 to 1500 MHz, are now available. All devices in this family utilize a common package and application layout. These devices are packaged in a 2 x 2 mm, 8-pin, plastic DFN.

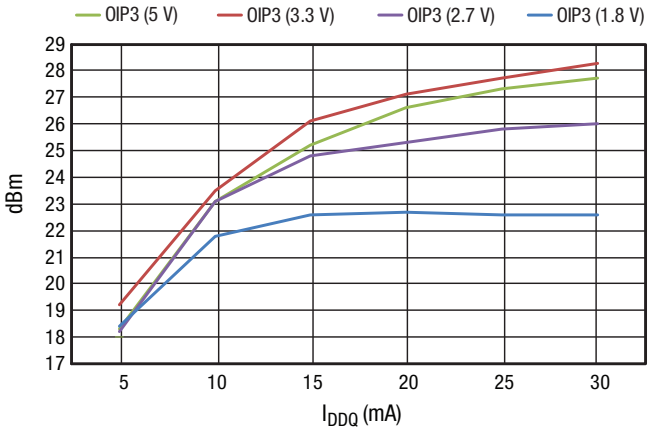

Figure 5. OIP3 vs. I_{DDQ} at 2.45 GHz
SKY67014-396LF

SKY67105, SKY67106, SKY67107 Highlights:

These are high-gain, high-linearity LNA with outstanding isolation characteristics. Utilizing an e-pHEMT cascode first stage and a e-pHEMT on InGaP HBT output stage, these devices offer high gain of typically 35 dB. These devices obtain < 0.8 dB typical noise figure from the pHEMT input stage and efficient linearity (OIP3 > 37 dBm) from the output stage. With outstanding isolation, these devices are unconditionally stable to 24 GHz and beyond.

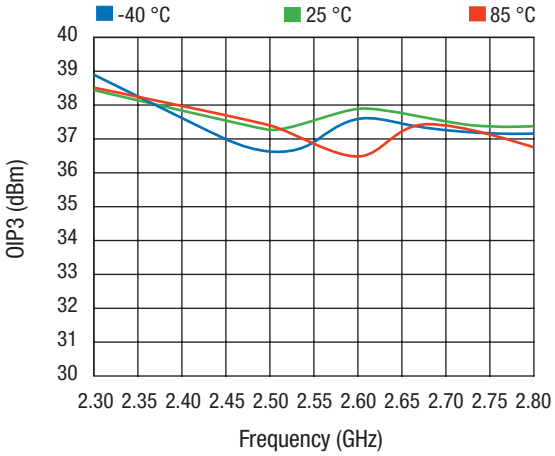

Figure 6. OIP3 vs. Frequency Over Temperature

White Papers, Application Notes, Published Articles

For additional information, please refer to the following:

WEB White Papers

Designing Ultra Low Noise Amplifiers for Infrastructure Receiver Applications

Ultra-Low Noise Figure, High Gain Amplifier with High Linearity

Skyworks De-embedded Scattering Parameters

WEB Application Notes

SKY65050-372LF: Low Noise Amplifier Operation

SKY65047-360LF Matching Circuits for Various Frequency Bands

WEB Published Articles

Make Accurate Sub-1 dB Noise Figure Measurements Part 1: Noise Concepts

Make Accurate Sub-1 dB Noise Figure Measurements Part 2: The Measurements

Green Initiative™

Through our Green Initiative,™ we are committed to manufacturing products that comply with global government directives and industry requirements.

Skyworks is continuously innovating RF, analog, and mixed-signal ICs. For the latest product introductions and information about Skyworks, visit our Web site at **www.skyworksinc.com**

For additional information on our broad overall product portfolio, please contact your local sales office or email us at **sales@skyworksinc.com.**

www.skyworksinc.com

USA

Headquarters: Massachusetts
Skyworks Solutions, Inc.
20 Sylvan Road
Woburn, MA 01801
Telephone: (781) 376 3000
Fax: (781) 376 3100
sales@skyworksinc.com

California
Skyworks Solutions, Inc.
5221 California Avenue
Irvine, CA 92617
Telephone: (949) 231 3000
Fax: (949) 231 3206
sales@skyworksinc.com

Skyworks Solutions, Inc.
3230 Scott Boulevard
Santa Clara, CA 95054
Telephone: (408) 330-1400
Fax: (408) 737-4611
sales@skyworksinc.com

Maryland
Skyworks Solutions, Inc.
5520 Adamstown Road
Adamstown, MD 21710
Telephone: (301) 695 9400
Fax: (301) 695 7065
transtech@skyworksinc.com

EUROPE

Denmark
Skyworks Solutions, Inc.
Parallelvej 10
Lyngby 2800, Denmark
Telephone: +45 45267945
Fax: +45 45267710
jan.thoning@skyworksinc.com

France
Skyworks Semiconductor SAS
60 rue Saint André des Arts
Bâtiment D
75006 Paris
France
Telephone: +33 1 43548540
Fax: +33 1 43540005
irene.pfeiffer@skyworksinc.com

United Kingdom
Skyworks Solutions, Ltd.
The Abbey
Preston Road, Suite S1A
Abbey Manor Business Centre
Yeovil, Somerset BKS BA20 2EN, UK
Telephone: +44 7909 526 595
Fax: +44 1935 431269
robert.brophy@skyworksinc.com

Finland
Skyworks Solutions, Inc.
Keilasatama 3
02150 Espoo
Finland
Telephone: +358 925107131
tommi.hiillos@skyworksinc.com

ASIA • PACIFIC

China
Skyworks Solutions Commercial
(Shenzhen) Co., Ltd. Shanghai Branch
Room 2901-02, Chong Hing
Finance Center,
No. 288 Nanjing Road (W),
Shanghai, 200003 China
Telephone: +86 21 23066230
Fax: +86 21 33663398
elaine.zhao@skyworksinc.com

Skyworks Solutions, Inc.
Room 05, 11/F, Tower 2,
Kerry Plaza
No. 1 Zhongxinsi Road
Futian District
Shenzhen 518048 PRC
Telephone: +86 755 8291 3788
ext. 60017
Fax: +86 755 8293 1633
sabrina.chen@skyworksinc.com

Skyworks Solutions, Inc.
Suite 1212, COFCO, No. 8
Jianguomennei Avenue
Dongcheng District
Beijing, 100005 PRC
Telephone: +8610 652 60859
ext. 61608
Fax: +8610 852 98350
david.qi@skyworksinc.com

Japan
Skyworks Solutions, Inc.
3-20-2 Nishi-Shinjuku
Shinjuku-ku
Opera City Tower
Tokyo, 163-1436
Japan
Telephone: +81 3 5308 5180
Fax: +81 3 5308 5190
ahihiro.karikomi@skyworksinc.com

Korea
Skyworks Solutions, Inc.
12th Floor West Wing Posco Center
892 Daechi-Dong, Kangnam-Gu
Seoul, Korea 135-777
Telephone: +822 3490 3816
christine.cho@skyworksinc.com

Singapore
Skyworks Global Pte Ltd
10 Ang Mo Kio Street 65
#05-15/16 Techpoint
Singapore 569059
Telephone: +65 64031971
Fax: +65 64031931
yuenfong.choong@skyworksinc.com

Taiwan
Skyworks Solutions, Inc.
4 F, #198, Section 2
Tun Hwa S. Road
Taipei 106, Taiwan ROC
Telephone: +8862 5559 8990
Fax: +8662 2735 6508
christina.hsu@skyworksinc.com

Skyworks Solutions, Inc.
20 Sylvan Road, Woburn, MA 01801
USA: (781) 376-3000 • Asia: 886 2 2735 0399
Europe: 33 (0)1 43548540 • Fax: (781) 376-3100
Email: sales@skyworksinc.com • **www.skyworksinc.com**

BRO394-12B 4/12 ♻ Printed on Recycled Paper.

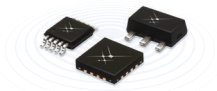

SKYWORKS®