PRODUCT SUMMARY

SKY77752-21: SkyHi™ Broadband PA Module for WCDMA / HSDPA / HSUPA / HSPA+ / LTE (Bands I, II, V, VIII) CDMA (Bands I, II, V)

Applications

- WCDMA handsets
- HSDPA
- HSUPA
- CDMA2000
- EVDO
- LTE

Features

- Low voltage positive bias supply: VBATT 3.0 V to 4.5 V
- Good linearity
- High efficiency
  - -44% at maximum power output
- Large dynamic range
- Small, low profile package
  - 3 mm x 4 mm x 0.9 mm
  - 16-pad configuration
- Power down control
- InGaP
- Supports low collector voltage VCC operation
- Digital Enable
- No VREF required
- CMOS compatible control signals
- Integrated Directional Coupler
- For RoHS and other product compliance information, see the Skyworks Certificate of Conformance.

Description

The SKY77752-21 SkyHi™ Power Amplifier Module (PAM) is a fully matched, 16-pad, surface mount module developed for Wideband Code Division Multiple Access (WCDMA), Code Division Multiple Access (CDMA), and Long Term Evolution (LTE) applications. This small and efficient module packs full coverage for WCDMA Bands I, II, V, and VIII into a single compact package. The SKY77752-21 meets stringent spectral linearity requirements for WCDMA transmission up to maximum power output. The PAM also meets stringent spectral linearity requirements for CDMA, HSDPA, HSUPA, HSPA+, and CDMA2000 data transmission with high power added efficiency. A directional coupler integrated into the module eliminates the need for any external coupler.

The single Gallium Arsenide (GaAs) Microwave Monolithic Integrated Circuit (MMIC) contains all active circuitry in the module. The MMIC contains onboard bias circuitry, as well as input and interstage matching circuits. Output match into a 50 Ω load is realized off-chip within the module package to optimize efficiency and power performance.

The SKY77752-21 PAM is manufactured with Skyworks InGaP GaAs Heterojunction Bipolar Transistor (HBT) process that provides for all positive voltage DC supply operation while maintaining high efficiency and good linearity. No VREF voltage is required. Power down is accomplished by setting the voltage on VENHB and VENLB to zero volts. No external supply side switch is needed as typical "off" leakage is a few microamperes with full primary voltage supplied from the battery.

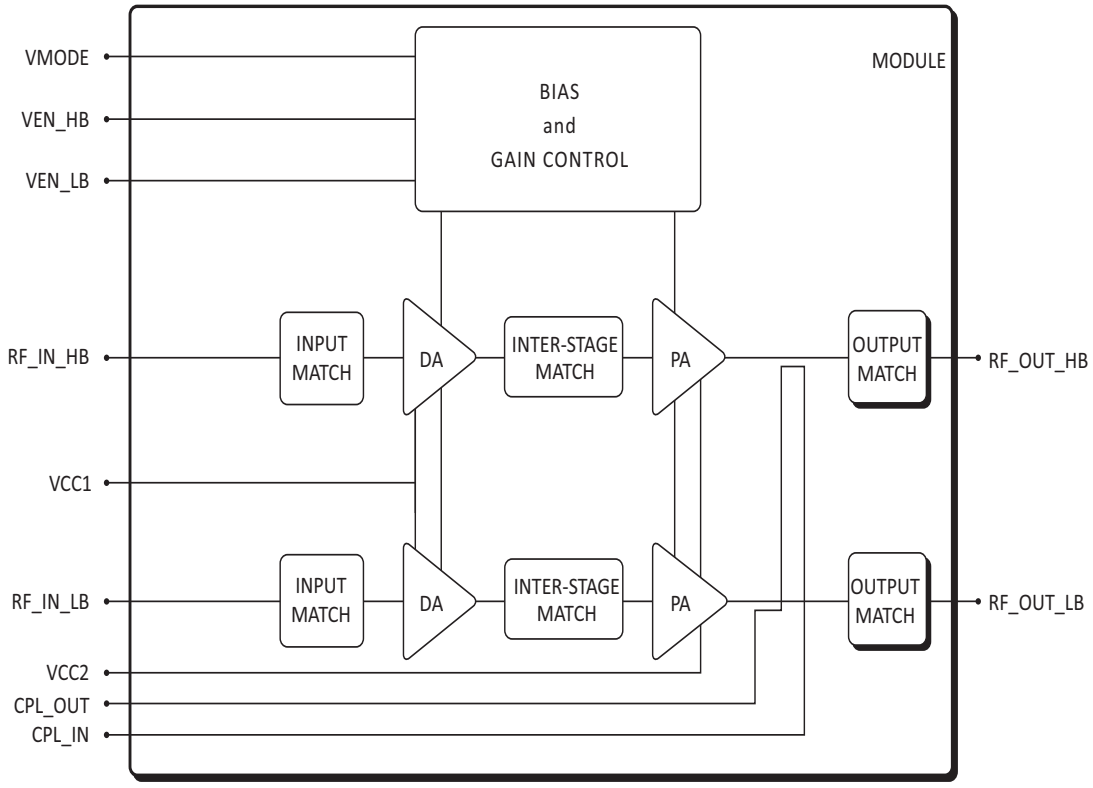

Figure 1. Functional Block Diagram

Ordering Information

Product Name	Order Number	Evaluation Board Part Number
SKY77752-21 SkyHi™ Broadband Power Amplifier Module	SKY77752-21	EN21-D515-001 REV A V1

Copyright © 2012-2013, 2026, Skyworks Solutions, Inc. All Rights Reserved.

Information in this document is provided in connection with Skyworks Solutions, Inc., and its subsidiaries (“Skyworks”) products or services. These materials, including the information contained herein, are provided by Skyworks as a service to its customers and may be used for informational purposes only by the customer. Skyworks assumes no responsibility for errors or omissions in these materials or the information contained herein. Skyworks may change its documentation, products, services, specifications or product descriptions at any time, without notice. Skyworks makes no commitment to update the materials or information and shall have no responsibility whatsoever for conflicts, incompatibilities, or other difficulties arising from any future changes.

No license, whether express, implied, by estoppel or otherwise, is granted to any intellectual property rights by this document. Skyworks assumes no liability for any materials, products or information provided hereunder, including the sale, distribution, reproduction or use of Skyworks products, information or materials, except as may be provided in Skyworks’ Terms and Conditions of Sale.

THE INFORMATION IN THIS DOCUMENT AND THE MATERIALS AND PRODUCTS DESCRIBED THEREIN ARE PROVIDED “AS IS” WITHOUT WARRANTY OF ANY KIND, WHETHER EXPRESS, IMPLIED, STATUTORY, OR OTHERWISE, INCLUDING FITNESS FOR A PARTICULAR PURPOSE OR USE, MERCHANTABILITY, PERFORMANCE, QUALITY OR NON-INFRINGEMENT OF ANY INTELLECTUAL PROPERTY RIGHT; ALL SUCH WARRANTIES ARE HEREBY EXPRESSLY DISCLAIMED. SKYWORKS DOES NOT WARRANT THE ACCURACY OR COMPLETENESS OF THE INFORMATION, TEXT, GRAPHICS OR OTHER ITEMS CONTAINED WITHIN THESE MATERIALS. SKYWORKS SHALL NOT BE LIABLE FOR ANY DAMAGES, INCLUDING BUT NOT LIMITED TO ANY SPECIAL, INDIRECT, INCIDENTAL, STATUTORY, OR CONSEQUENTIAL DAMAGES, INCLUDING WITHOUT LIMITATION, LOST REVENUES OR LOST PROFITS THAT MAY RESULT FROM THE USE OF THE MATERIALS OR INFORMATION, WHETHER OR NOT THE RECIPIENT OF MATERIALS HAS BEEN ADVISED OF THE POSSIBILITY OF SUCH DAMAGE.

Skyworks products are not designed, intended, authorized, or warranted for use or inclusion in life support or life endangering applications, devices, or systems where failure or inaccuracy might cause death or personal injury. Skyworks customers agree not to use or sell the Skyworks products for such applications, and further agree to, without limitation, fully defend, indemnify, and hold harmless Skyworks and its agents from and against any and all actions, suits, proceedings, costs, expenses, damages, and liabilities including attorneys' fees arising out of or in connection with such improper use or sale.

Skyworks assumes no liability for applications assistance, customer product design, or damage to any equipment resulting from the use of Skyworks products outside of Skyworks’ published specifications or parameters. Customers are solely responsible for their products and applications using the Skyworks products.

“Skyworks” and the Skyworks Starburst logo are registered trademarks of Skyworks Solutions, Inc., in the United States and other countries. Third-party brands and names are for identification purposes only and are the property of their respective owners. Additional information, including relevant terms and conditions, posted at www.skyworksinc.com, are incorporated by reference.