PRODUCT SUMMARY

SKY66411-11: 2.4 GHz Front-End Module for Bluetooth®/Zigbee®/Thread Applications

Applications

- Medical wearable devices
- Wireless health monitoring
- Trackers
- Internet of Things (IoT) devices

Features

- Integrated PA with up to +10 dBm output power
- Integrated LNA (RX mode noise figure 2.2 dB typ.)
- Bypass path for TX/RX
- Single-ended transmit/receive interface
- Fast switch on/off time: < 1 µs
- VCC2 supply range: 1.7 V to 3.6 V
- Sleep mode current: < 1 µA typical
- Small 9-pin (1.32 mm x 1.32 mm x 0.381 mm) Chip Scale Package (CSP) (MSL1, 260 °C per JEDEC-J-STD-020)
- For RoHS and other product compliance information, see the Skyworks Certificate of Conformance.

Description

The SKY66411-11 is a high-performance, fully integrated RF front-end module (FEM) designed for Bluetooth® (including low energy), Zigbee®, and Thread applications.

The SKY66411-11 is designed for ease of use and maximum flexibility. The device provides a power amplifier, low-noise amplifier, low-loss bypass path, and transmit/receive switches.

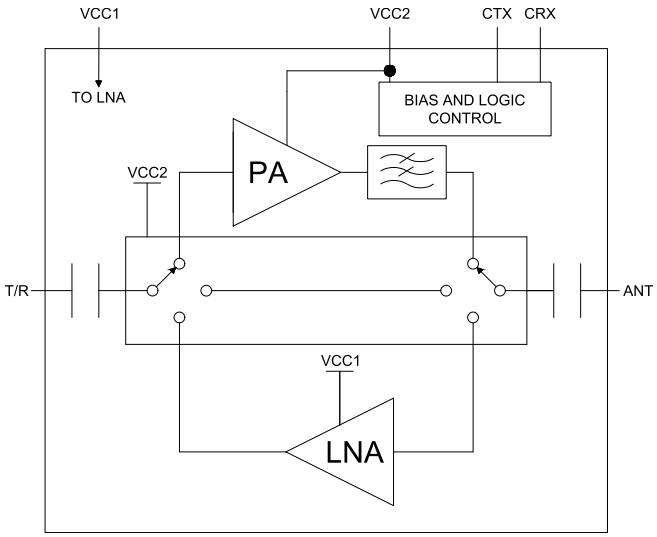

Figure 1. Functional Block Diagram

The PA and LNA operate over wide supply voltage ranges, allowing the SKY66411-11 to be used in battery-powered applications over a wide spectrum of the battery discharge curve.

Ordering Information

Part Number	Description	Evaluation Board Part Number
SKY66411-11	2.4 GHz Front-End Module for Bluetooth®/Zigbee®/Thread Applications	SKY66411-11EK1

Copyright © 2025, Skyworks Solutions, Inc. All Rights Reserved.

Information in this document is provided in connection with Skyworks Solutions, Inc., and its subsidiaries (“Skyworks”) products or services. These materials, including the information contained herein, are provided by Skyworks as a service to its customers and may be used for informational purposes only by the customer. Skyworks assumes no responsibility for errors or omissions in these materials or the information contained herein. Skyworks may change its documentation, products, services, specifications or product descriptions at any time, without notice. Skyworks makes no commitment to update the materials or information and shall have no responsibility whatsoever for conflicts, incompatibilities, or other difficulties arising from any future changes.

No license, whether express, implied, by estoppel or otherwise, is granted to any intellectual property rights by this document. Skyworks assumes no liability for any materials, products or information provided hereunder, including the sale, distribution, reproduction or use of Skyworks products, information or materials, except as may be provided in Skyworks’ Terms and Conditions of Sale.

THE INFORMATION IN THIS DOCUMENT AND THE MATERIALS AND PRODUCTS DESCRIBED THEREIN ARE PROVIDED “AS IS” WITHOUT WARRANTY OF ANY KIND, WHETHER EXPRESS, IMPLIED, STATUTORY, OR OTHERWISE, INCLUDING FITNESS FOR A PARTICULAR PURPOSE OR USE, MERCHANTABILITY, PERFORMANCE, QUALITY OR NON-INFRINGEMENT OF ANY INTELLECTUAL PROPERTY RIGHT; ALL SUCH WARRANTIES ARE HEREBY EXPRESSLY DISCLAIMED. SKYWORKS DOES NOT WARRANT THE ACCURACY OR COMPLETENESS OF THE INFORMATION, TEXT, GRAPHICS OR OTHER ITEMS CONTAINED WITHIN THESE MATERIALS. SKYWORKS SHALL NOT BE LIABLE FOR ANY DAMAGES, INCLUDING BUT NOT LIMITED TO ANY SPECIAL, INDIRECT, INCIDENTAL, STATUTORY, OR CONSEQUENTIAL DAMAGES, INCLUDING WITHOUT LIMITATION, LOST REVENUES OR LOST PROFITS THAT MAY RESULT FROM THE USE OF THE MATERIALS OR INFORMATION, WHETHER OR NOT THE RECIPIENT OF MATERIALS HAS BEEN ADVISED OF THE POSSIBILITY OF SUCH DAMAGE.

Skyworks products are not designed, intended, authorized, or warranted for use or inclusion in life support or life endangering applications, devices, or systems where failure or inaccuracy might cause death or personal injury. Skyworks customers agree not to use or sell the Skyworks products for such applications, and further agree to, without limitation, fully defend, indemnify, and hold harmless Skyworks and its agents from and against any and all actions, suits, proceedings, costs, expenses, damages, and liabilities including attorneys' fees arising out of or in connection with such improper use or sale.

Skyworks assumes no liability for applications assistance, customer product design, or damage to any equipment resulting from the use of Skyworks products outside of Skyworks’ published specifications or parameters. Customers are solely responsible for their products and applications using the Skyworks products.

“Skyworks” and the Skyworks Starburst logo are registered trademarks of Skyworks Solutions, Inc., in the United States and other countries. Third-party brands and names are for identification purposes only and are the property of their respective owners. Additional information, including relevant terms and conditions, posted at www.skyworksinc.com, are incorporated by reference.