AN1281: Protecting PoE PD Designs against Non-Standard PoE Injectors

This document provides information about protecting Power over Ethernet (PoE) Powered Device (PD) applications from non-standard, passive PoE injectors.

PoE PD devices are designed to work with Power Sourcing Equipment (PSE) defined by the PoE Standard. In some cases, these expensive PSE devices are replaced by non-standard, passive PoE injectors. Since these passive PoE injectors do not fully mimick the operation of the PSE, designers of PoE PD applications must take care to ensure that their PD device designs can operate safely with these injectors.

KEY FEATURES

- Ensures operation with passive PoE injectors
- Applicable for Si3402B, Si3404, Si3406x, and Si34071
- Inexpensive and straightforward solution

Table of Contents

1. The Issue with Non-Standard PoE Injectors 3
2. Simple Protection against Non-Standard, Passive, PoE Injectors 5
3. Protection Against Non-Standard, Passive PoE Injectors with Enhanced ESD Performance . . 6

1. The Issue with Non-Standard PoE Injectors

Passive PoE injectors behave fundamentally different from PoE PSE devices. The behavior of the standard PSE devices is defined by the PoE standard. They have a state machine which describes what a PSE device must do in every moment, depending on various measured data. The non-standard, passive PoE injectors are simple power supplies which provide the necessary power for the PDs regardless their power needs. The input voltage waveform of a typical Class 8, IEEE 802.3bt compatible PD device during the turn-on process, powered by a standard PSE is shown in the figure below.

After a PD gets connected to a standard PSE, the PSE performs several checks before it powers up the PD. The first check is called the detection, when the PSE determines whether a PoE capable device was connected to its port or not. This phase is marked with a green rectangle in Figure 1, the PD's input voltage is between 2.7 V and 10.1 V in this phase. In the following phase, the PSE checks the power needs of the PD; this phase is called classification. During the second phase, the PSE generates voltage pulses between 14.5 V and 20.5 V and measures the PD's current during the pulses. The classification phase is marked with blue rectangles in the figure below. After classification, the PSE proceeds to power up the PD in a slow, controlled manner; thus, the PSE eliminates the large input current and reduces the harmonic content of the turn-on voltage transient. A pink rectangle marks the power-up phase in the following figure.

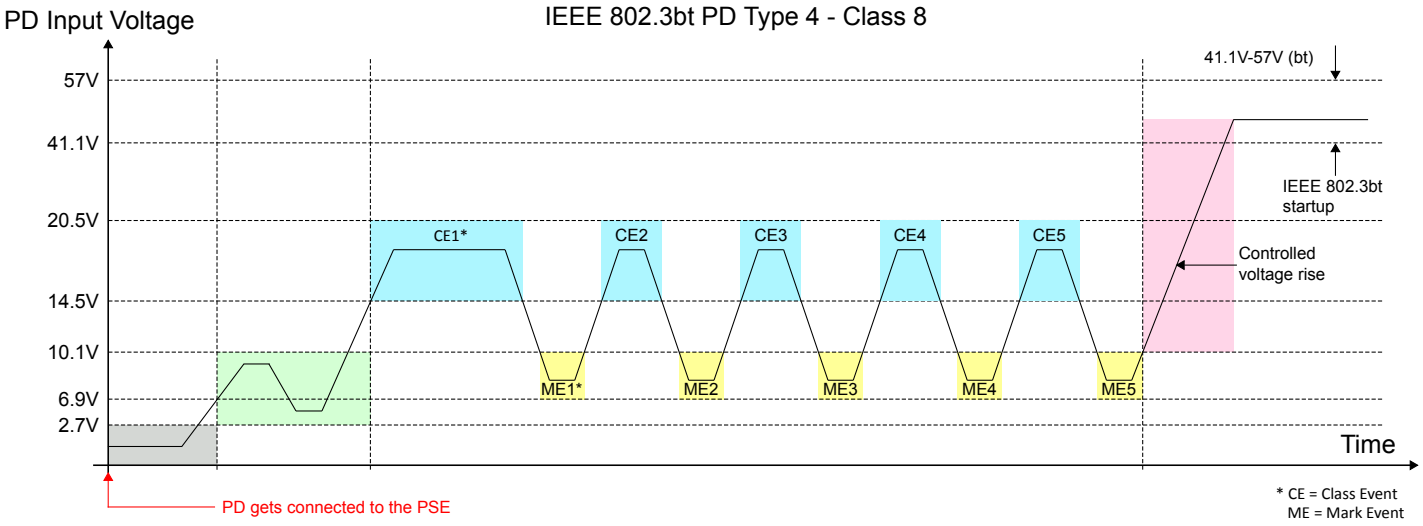

Figure 1.1. Typical Voltage Waveform at the Ethernet Port When the PD is Powered by a PSE

In contrast to the standard PoE PSE, the non-compliant, passive PoE injector skips the first two phase of the PoE power up sequence. The non-compliant, passive PoE injector turns on the PD in an uncontrolled manner. This result in a steep voltage rise on the input of PD, with a tremendous amount of harmonic content. The following figure shows the input voltage waveform of the PD when it is powered up by a non-compliant passive PoE injector.

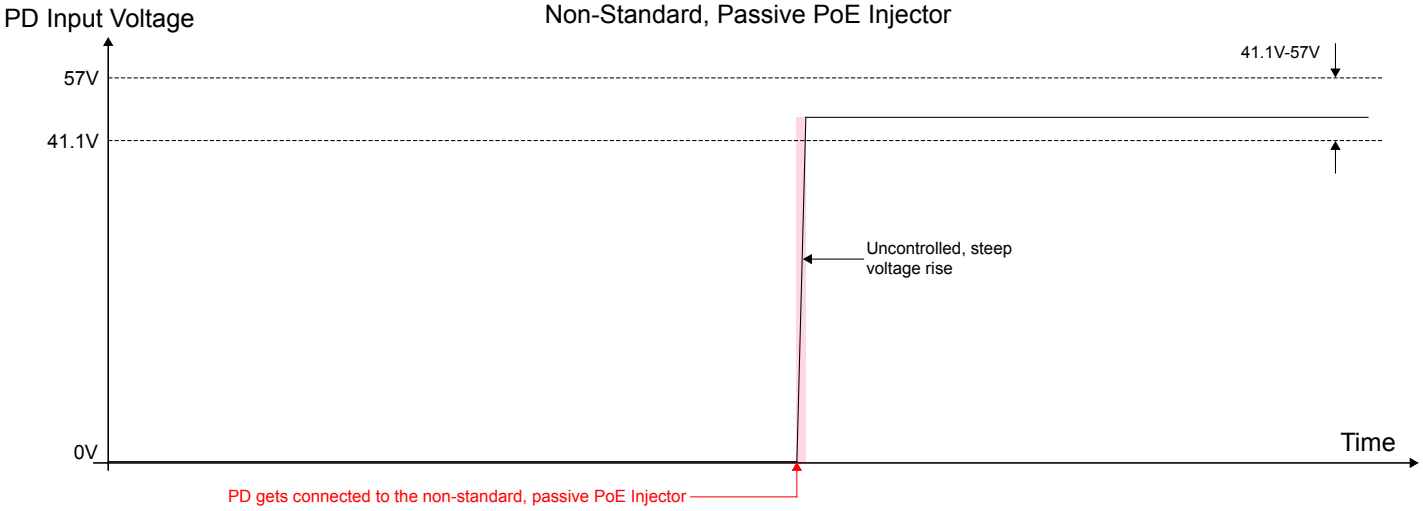

Figure 1.2. Typical Voltage Waveform at the Ethernet Port when PD is Powered by a Non-Standard, Passive, PoE Injector

To understand why it is not optimal to power a PD from a non-standard, passive PoE injector, take a look at the figure below, which depicts a simplified schematic of the PD's PoE interface and includes the Ethernet cable and non-standard passive PoE injector. It is not easy to spot at first glance, but this circuit contains an undamped LC tank formed by the parasitic inductance of the Ethernet cable, the ferrite beads, and the CDET detection capacitor. This undamped LC tank circuit will not cause any problems when the PD is powered from a PSE since a PSE ramps up the input voltage slowly. Unfortunately, it cannot be guaranteed that non-standard, passive PoE injectors will work similarly.

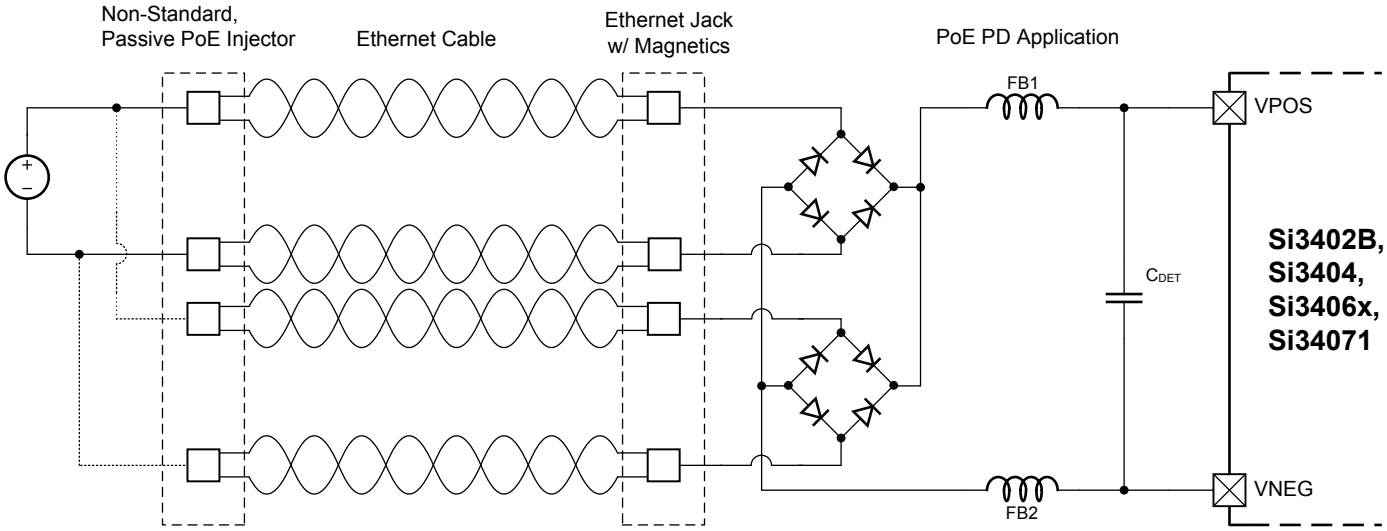

Figure 1.3. Simplified Schematic of the PD PoE Interface

To understand why a non-compliant, passive PoE injector can cause problems, see the figure below. It depicts the relation between the input voltage of a PD device and the V_{POS}—V_{NEG} voltage. The input voltage waveform at the Ethernet port is still steep since the PD is powered by a passive PoE injector. The harmonics caused by this fast voltage ramp-up excite the undamped LC tank. Due to this excitation, a voltage that far exceeds the voltage of the passive PoE injector can arise between V_{POS}—V_{NEG} . The voltage rise between V_{POS}—V_{NEG} depends on the dampening of the LC tank and the steepness of the input voltage rise. In the case of the undampened LC tank, the V_{POS}—V_{NEG} voltage can rise so much that it triggers the PD IC's internal surge protection. Since the internal surge protection is designed for high-voltage, low-energy surge events, it cannot handle the massive amount of power delivered by the passive PoE injector, **which can lead to PD IC malfunction**. If there is some dampening introduced in the LC tank, it significantly mitigates the voltage rise, and the operation of the PD device with a passive PoE injector will be safe. The figure below shows what would happen if there were no diode bridges in the system. In the case of no diode bridges being present, the V_{POS}—V_{NEG} voltage will oscillate around the voltage of the passive PoE injector. Meanwhile, the amplitude of the oscillation becomes smaller in each period until it finally settles to the voltage of the passive PoE injector.

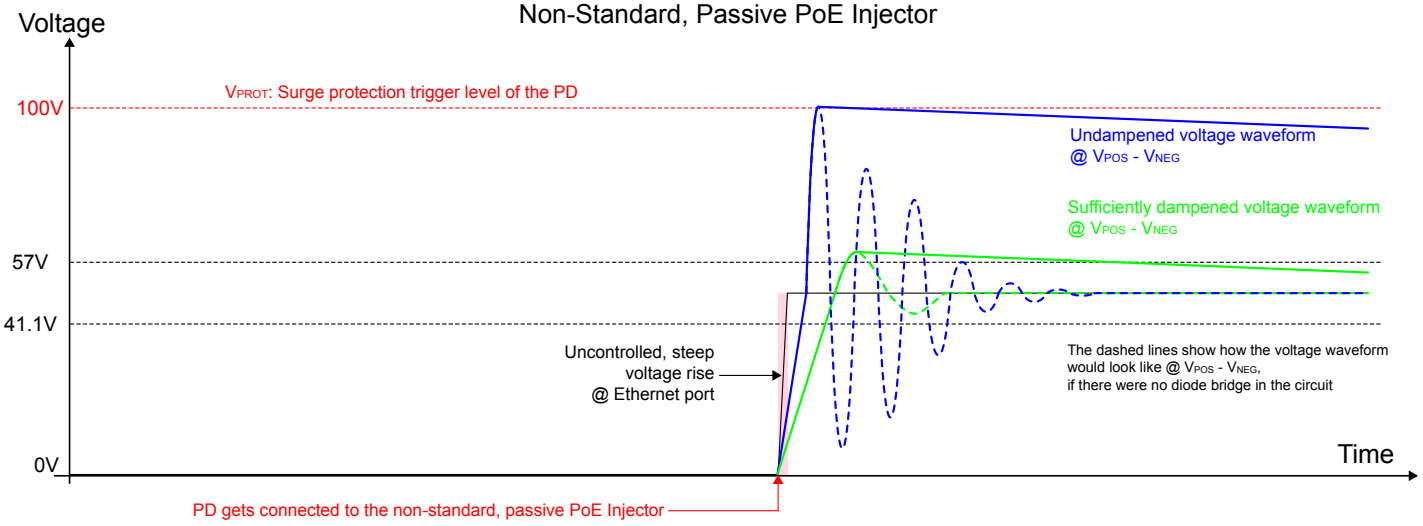

Figure 1.4. Non-Standard, Passive PoE Injectors Effect on the V_{POS} – V_{NEG} Voltage

2. Simple Protection against Non-Standard, Passive, PoE Injectors

To protect the application against the non-standard, passive PoE injectors add an R_{INJ} resistor in series with the 100 nF detection capacitor (C_{DET}). This resistor introduces the necessary damping to the LC tank circuit described in the previous section. The recommended value for the R_{INJ} resistor is 3 Ω and the resistor should be rated at least for 1/10 W of power and 100 V. The R_{INJ} resistor does not affect the detection process and the resistor does not dissipate any power during normal, powered up operation. The figure below depicts the application of the R_{INJ} resistor with multiple Skyworks PD ICs.

This protection method against non-standard, passive PoE injectors works with the following Skyworks PD ICs:

- Si3402B
- Si3404
- Si3406x
- Si34071

Due to its simplicity, it is recommended to install the R_{INJ} resistor in every PD design, which is based on the ICs above.

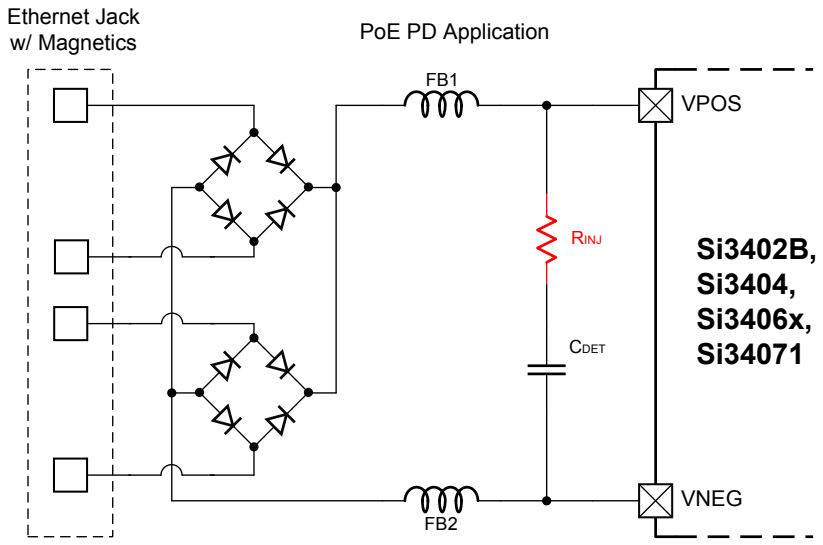

Figure 2.1. R_{INJ} Resistor Application

3. Protection Against Non-Standard, Passive PoE Injectors with Enhanced ESD Performance

In those cases, when the application requires enhanced ESD performance (higher than around ±6 kV contact discharge), the designer must consider using a TVS diode (TVS_{INJ}) connected between V_{POS} and V_{NEG}, instead of the R_{INJ} resistor. It's recommended to use a uni-directional TVS diode with the appropriate IEC 61000-4-2 ESD rating, similar like SMAJ58A from Littelfuse.

This protection method against non-standard, passive PoE injectors while maintaining enhanced ESD performance works with the following Skyworks PD ICs:

- Si3402B
- Si3404
- Si3406x
- Si34071

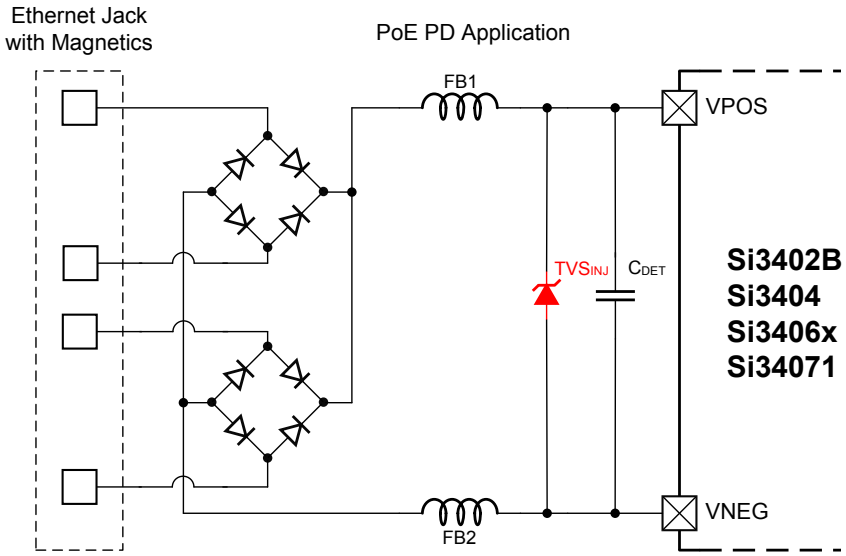

Figure 3.1. TVS_{INJ} Application

SKYWORKS®

Connecting Everyone and Everything, All the Time



Portfolio
skyworksinc.com

Quality
skyworksinc.com/quality

Support & Resources
skyworksinc.com/support

Copyright © 2022 Skyworks Solutions, Inc. All Rights Reserved.

Information in this document is provided in connection with Skyworks Solutions, Inc. ("Skyworks") products or services. These materials, including the information contained herein, are provided by Skyworks as a service to its customers and may be used for informational purposes only by the customer. Skyworks assumes no responsibility for errors or omissions in these materials or the information contained herein. Skyworks may change its documentation, products, services, specifications or product descriptions at any time, without notice. Skyworks makes no commitment to update the materials or information and shall have no responsibility whatsoever for conflicts, incompatibilities, or other difficulties arising from any future changes.

No license, whether express, implied, by estoppel or otherwise, is granted to any intellectual property rights by this document. Skyworks assumes no liability for any materials, products or information provided hereunder, including the sale, distribution, reproduction or use of Skyworks products, information or materials, except as may be provided in Skyworks' Terms and Conditions of Sale.

THE MATERIALS, PRODUCTS AND INFORMATION ARE PROVIDED "AS IS" WITHOUT WARRANTY OF ANY KIND, WHETHER EXPRESS, IMPLIED, STATUTORY, OR OTHERWISE, INCLUDING FITNESS FOR A PARTICULAR PURPOSE OR USE, MERCHANTABILITY, PERFORMANCE, QUALITY OR NON-INFRINGEMENT OF ANY INTELLECTUAL PROPERTY RIGHT; ALL SUCH WARRANTIES ARE HEREBY EXPRESSLY DISCLAIMED. SKYWORKS DOES NOT WARRANT THE ACCURACY OR COMPLETENESS OF THE INFORMATION, TEXT, GRAPHICS OR OTHER ITEMS CONTAINED WITHIN THESE MATERIALS. SKYWORKS SHALL NOT BE LIABLE FOR ANY DAMAGES, INCLUDING BUT NOT LIMITED TO ANY SPECIAL, INDIRECT, INCIDENTAL, STATUTORY, OR CONSEQUENTIAL DAMAGES, INCLUDING WITHOUT LIMITATION, LOST REVENUES OR LOST PROFITS THAT MAY RESULT FROM THE USE OF THE MATERIALS OR INFORMATION, WHETHER OR NOT THE RECIPIENT OF MATERIALS HAS BEEN ADVISED OF THE POSSIBILITY OF SUCH DAMAGE.

Skyworks products are not intended for use in medical, lifesaving or life-sustaining applications, or other equipment in which the failure of the Skyworks products could lead to personal injury, death, physical or environmental damage. Skyworks customers using or selling Skyworks products for use in such applications do so at their own risk and agree to fully indemnify Skyworks for any damages resulting from such improper use or sale.

Customers are responsible for their products and applications using Skyworks products, which may deviate from published specifications as a result of design defects, errors, or operation of products outside of published parameters or design specifications. Customers should include design and operating safeguards to minimize these and other risks. Skyworks assumes no liability for applications assistance, customer product design, or damage to any equipment resulting from the use of Skyworks products outside of Skyworks' published specifications or parameters.

Skyworks, the Skyworks symbol, Sky5®, SkyOne®, SkyBlue™, Skyworks Green™, Clockbuilder®, DSPLL®, ISOmodem®, ProSLIC®, and SiPHY® are trademarks or registered trademarks of Skyworks Solutions, Inc. or its subsidiaries in the United States and other countries. Third-party brands and names are for identification purposes only and are the property of their respective owners. Additional information, including relevant terms and conditions, posted at www.skyworksinc.com, are incorporated by reference.

Skyworks Solutions, Inc. | Nasdaq: SWKS | sales@skyworksinc.com | www.skyworksinc.com
USA: 781-376-3000 | Asia: 886-2-2735 0399 | Europe: 33 (0)1 43548540