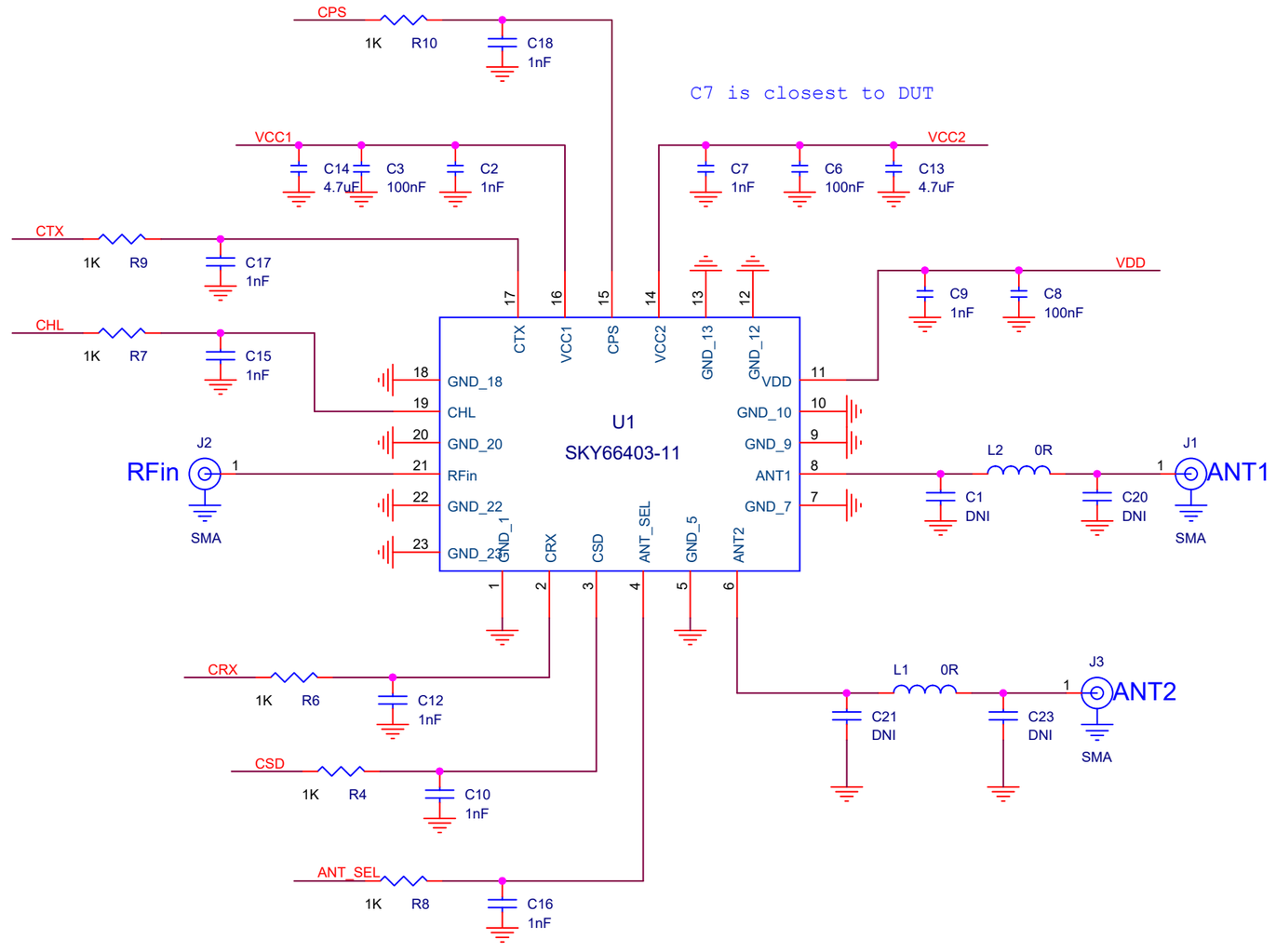

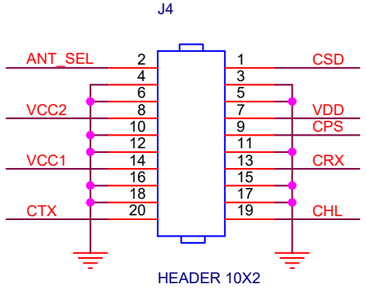

PCB1

TW22-D355-001

TW22-D355-001

CONTENTS OF THIS DOCUMENT ARE PROPRIETARY TO SKYWORKS SOLUTIONS INC. AND MAY NOT BE COPIED OR REPRODUCED BY ANY MEANS WITHOUT PRIOR WRITTEN APPROVAL FROM SKYWORKS SOLUTIONS INC. COPYRIGHT ©2024 SKYWORKS SOLUTIONS INC.

SKYWORKS SOLUTIONS INC.
1135 INNOVATION DRIVE
OTTAWA, ONTARIO CANADA
K2K 3G7

SKYWORKS® BREAKTHROUGH SIMPLICITY

Title	SKY66403-11_EK1_EVB
Size: B	Document Number: SCH-02976
Rev: B1	
Date: Tuesday, January 06, 2026	Sheet 1 of 1