QUAD-BAND GSM/GPRS RF SUBSYSTEM WITH DCR™ TRANSCEIVER

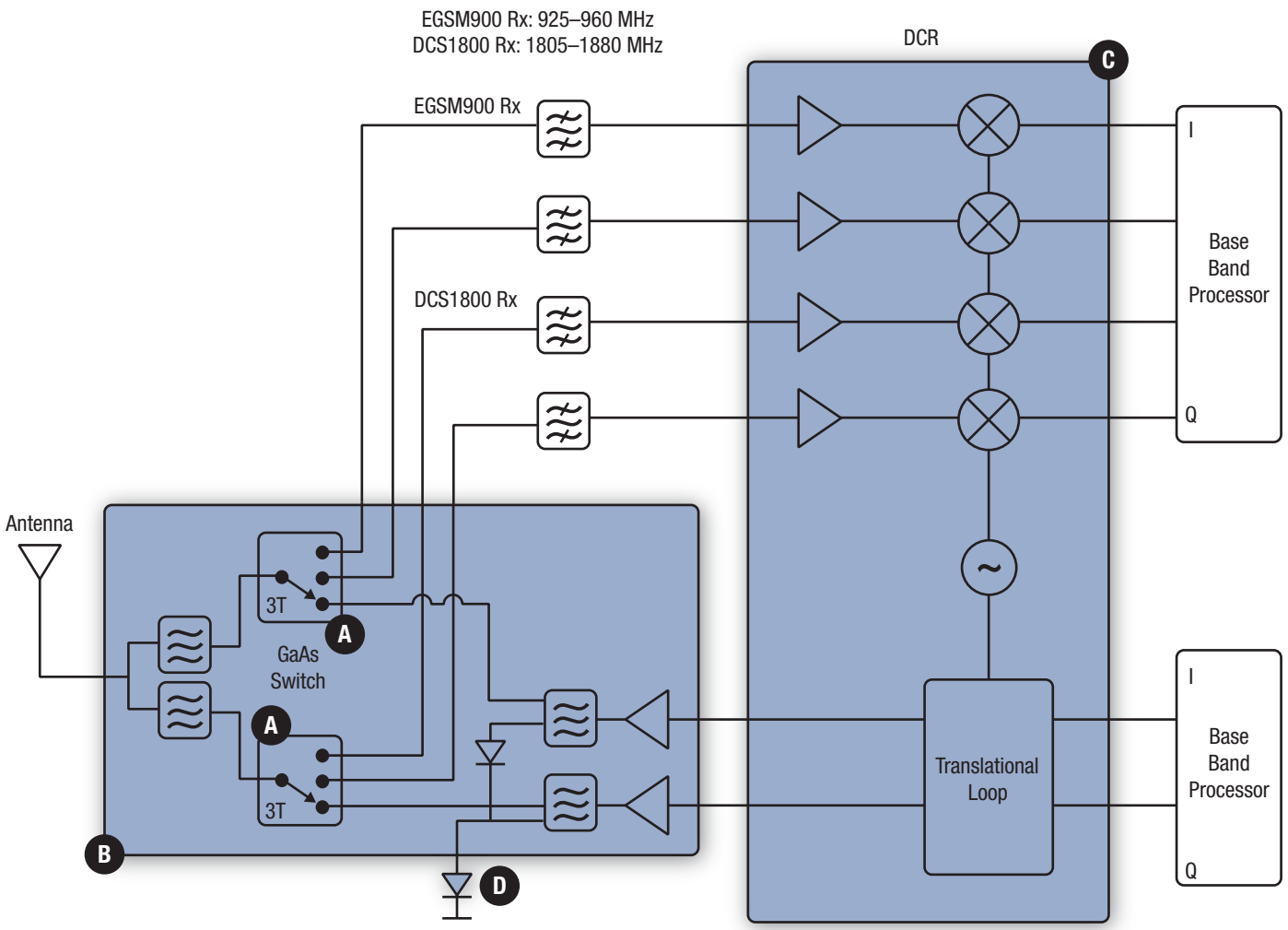

Switches

A SKY13270-92LF
AS219-321LF
AS221-306LF

Transmitter Module

B SKY77500
SKY77506

DCR

C SKY74117-13A

Schottky Diode

D SMS3923-015LF